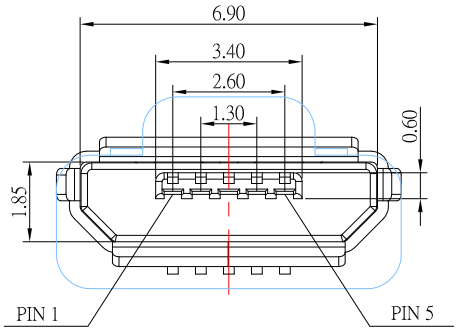

MRUSB-5B-VSE2-x-S165

鍍層厚度：

Blank : 1u"
2 : 15u"
3 : 30u"

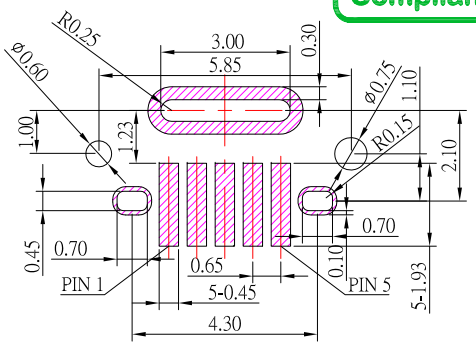

P.C.B LAYOUT MOUNTING PATTERN

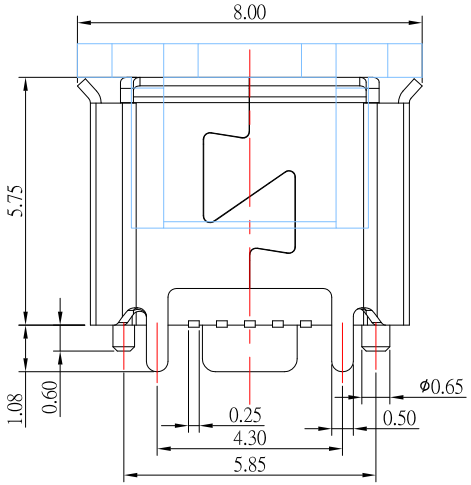

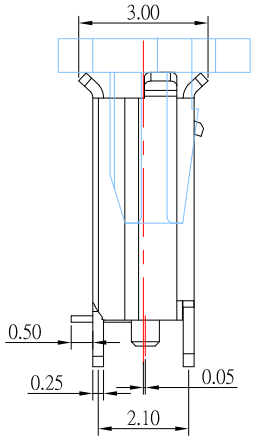

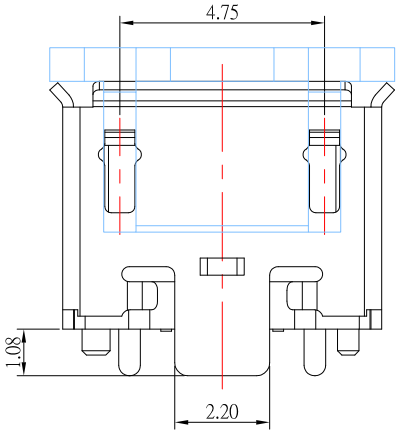

PIN NO.	SIGNAL NAME
PIN 1	VBUS
PIN 2	D−
PIN 3	D+
PIN 4	ID
PIN 5	GND

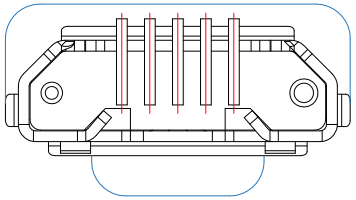

NOTES:

1.MATERIAL:

1.1 HOUSING: LCP,BLACK

1.2 CONTACT: PHOSPHOR BRONZE

1.3 SHELL: SUS

2.Finish:

2.1 CONTACT: PLATED GOLD IN MATING AREA ;
GOLD PLATED ON SOLDER BALLS ;
NICKEL UNDER PLATED OVERALL

2.2 SHELL: NICKEL UNDER PLATED SURFACE LAYER

3.SPECIFICATION:

3.1 CURRENT RATING: 1.0 A

3.2 DIELECTRIC WITHSSTANDING VOLTAGE: 100 VAC / MINUTE

3.3 CONTACT RESISTANCE: 30 mΩ MAX.

3.4 INSULATION RESISTANCE: 100 MΩ MIN.

3.5 MATING FORCE: 3.57 Kgf MAX.

3.6 UNMATING FORCE: 1.0 Kgf MIN.

3.7 TEMOERATURE RANG : -30°C~80°C

ITEM NO.	DESCRIPTION	DRAWN	DATE
6	新增PCB LAYOUT尺寸	Jack	031924
5	新增PIN標示和更新PCB LAYOUT位置	Jack	010924
4	新增尺寸	Jack	101823
3	更新圖面	Jack	092220
2	新增鍍層厚度選項	Jack	050420
1	新增PIN定義	Jack	021720

CONTACT 建倚科技股份有限公司
CONTACT TECHNOLOGY CORP.

TOLERANCE UNLESS OTHERWISE STATED : Up to 5 ±0.2; Above 5 ~ 15 ±0.3; Above 15 ~ 30 ±0.4; Above 30 ~ 50 ±0.5; Angle ±0.3°

3RD. ANGEL'S | UNITS | MM

DRAWN BY: Jack Lu	DATE 03/19/24	MAT'L	
CHECKED BY: Jacky Chen	DATE 03/19/24	FINISH	
APPROVED BY: Tony Kao	DATE 03/19/24	SCALE 1 : 1	SHEET NO. 1 of 1

TITLE	CONNECTOR
MODLE	MICRO USB 直立式 SMT TYPE 有捲邊
DWG NO.	MRUSB-5B-VSE2-x-S165
PART NO.	MRUSB-5B-VSE2-x-S165
SIZE	A4
VER	R6